SINOMAGS
希 磁 科 技

CURRENT SENSOR

PRODUCT SERIES: STB-CAS/FA1

PRODUCT PART NUMBER: STB-50CAS/K/FA1

REVISION: Ver 1.2

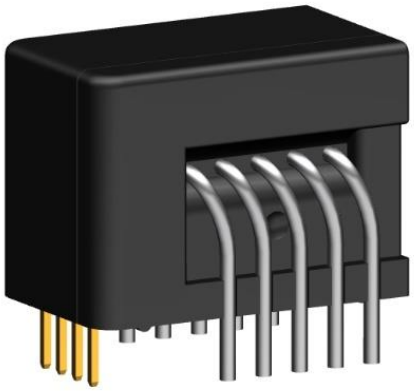

Sinomags Technology Co., Ltd.

Web site: www.sinomags.com

CONTENT

1. Description

For the electronic measurement of current: DC, AC, pulsed..., with galvanic separation between the primary and the secondary circuit.

Typical application

- Variable frequency converter
- Uninterruptible Power Supplies (UPS)
- Solar inverters.
- Direct-current dynamo
- Switched model power supplies (SMPS)

General parameters

Parameter	Symbol	Unit	Value
Working temperature	T_A	℃	-40 ~ 105
Storage temperature	T_stg	℃	-40 ~ 105
Mass	m	g	10.5

Absolute maximum parameters

Parameters	Symbol	Unit	Value
Maximum supply voltage	Vc max	V	7
Maximum ESD rating (HBM)	U_ESD max	kV	4

Remark: the unrecoverable damage may occur when the product works on the conditions over the absolute maximum ratings. Long-time working on the absolute maximum ratings may cause the degradation on performance and reliability.

Isolation parameters

Parameter	Symbol	Unit	Value	Remark
RMS voltage for AC test 50Hz/1 min	Ud	kV	4	
Impulse withstand voltage 1.2/50µs	Ûw	kV	6	
Clearance distance (pri. -sec)	dCl	mm	7.5	Shortest distance through air
Creepage distance (pri. -sec)	dCp	mm	7.5	Shortest path along device body
Electrical clearance	dCe	mm	6.2	When mounted on PCB with recommended layout
Case material			V0 according to UL 94	
Comparative tracking index	CTI	V	600	

2. STB-50CAS/K/FA1 parameters

Condition: Vcc = 5.0 V, NP = 1, RL = 10 kΩ, T A = 25℃, unless specified.

Parameters	Symbol	Unit	Min.	Typ.	Max.	Remark
Primary nominal RMS current	I_pn	A		50		
Primary current, measuring range	I_pm	A	150		150	
Number of primary turns	NP	-		1,4,5		
Supply voltage	Vc	V	4.75	5	5.25	
Current consumption	Ic	mA		15 + IP*NP/NS*1000		NS =964
Reference voltage@I_p=0A	V_ref	V	2.495	2.5	2.505	
External reference voltage	V_ref	V	0		4	
Output voltage @ I_pn	V_out	V		V_ref ± 0.625		
Output voltage @ I_pm	V_OM	V		V_ref ± 1.875		
Temperature coefficient of V_ref	TCV_ref	ppm/K		±5	±50	Internal reference
Electrical offset voltage	V_OE	mV	-0.725		0.725	100 % tested V_out – V_ref@ 0
Temperature coefficient of Vout @I_P = 0 A	TCV_out	ppm/K		±0.7	±3	ppm/K of 2.5V (-40 °C …105 °C)
Theoretical sensitivity	G_th	mV/A		12.5		0.625V @ I_pn
Sensitivity error	ξ_G	%	−0.7		0.7	100 % tested
Temperature coefficient of G	TCG	ppm/K			±40	−40 °C … 105 °C
Linearity error 0 ~ I_pn	ξ_L	% of I_pn		0.3		Tested @25℃
Reaction time @ 10 % of	t_ra	µs			0.3	
Response time @ 90 % of	t_r	µs			0.3	
-3 dB band width	BW	kHz		400		
Noise DC ~ 10 kHz DC ~ 100 kHz	Vnoise	mVpp		5 6		
Accuracy @ RT	X	% of I_pn			0.8	@ 25℃
Accuracy @ TA = 85 °C (105 °C)	X_TRange	% of I_pn			1.1(1.3)	-40℃ ~ 105℃

3. Step response time

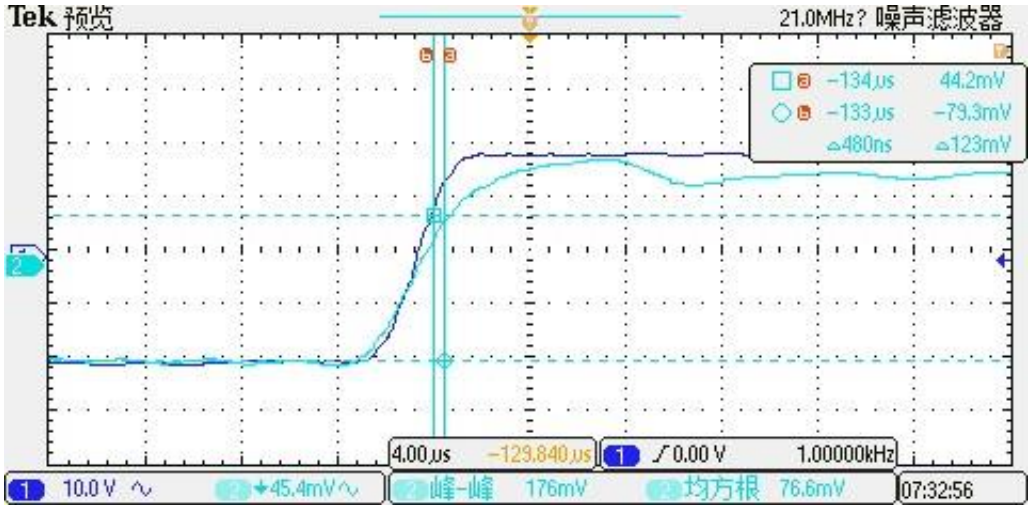

The step response time of STB-XXCAS/K/FA1 current sensors. The blue is primary current, while the green is output signal of current sensor. The step response time is less than 0.3 µs.

4. Dimensions: STB-50CAS/K/FA1

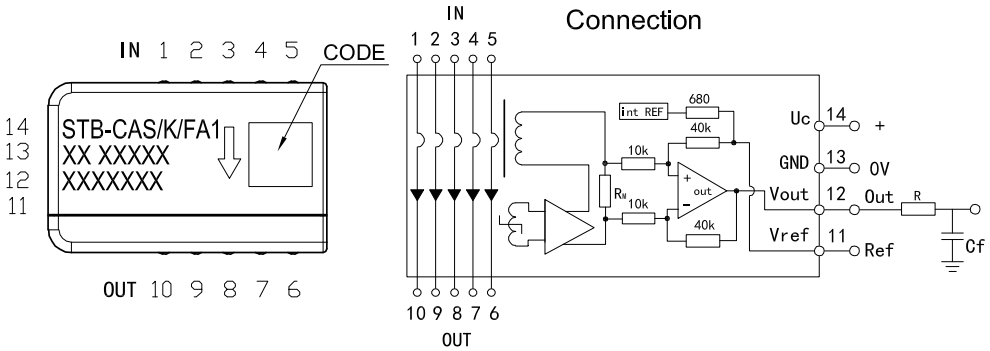

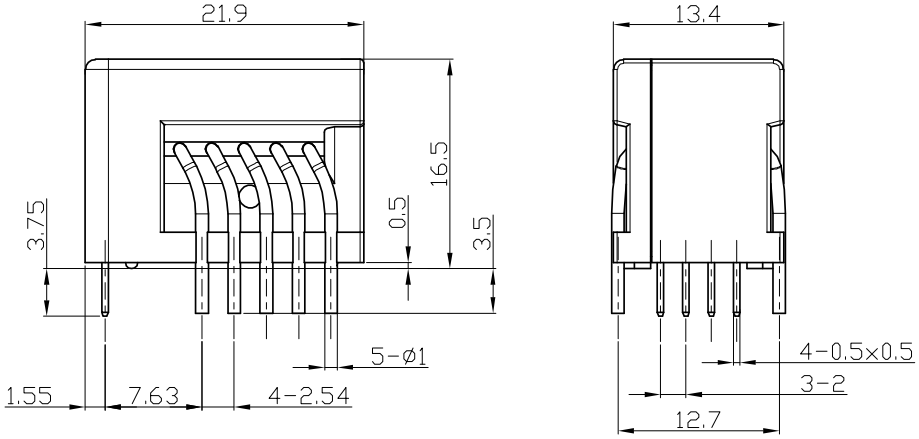

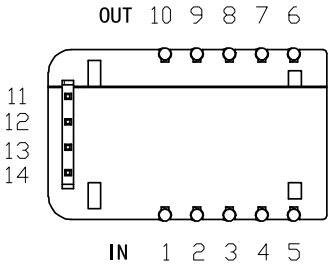

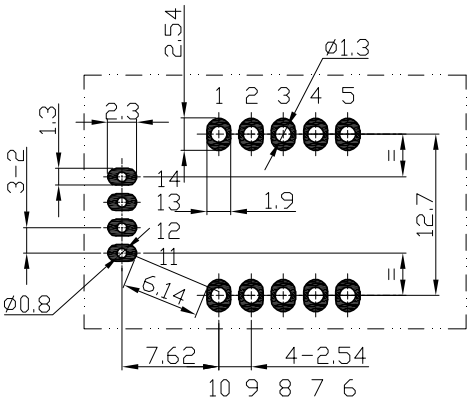

Number of primary turns N_p	Recommended connections
1	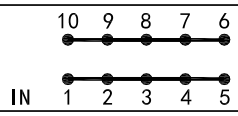
4	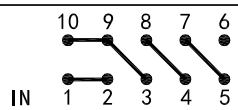
5	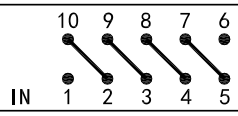

Material : Fit UL94V-0 & RoHS requirements ;
General tolerance : ±0.5
Unit :mm